SECTION A-A

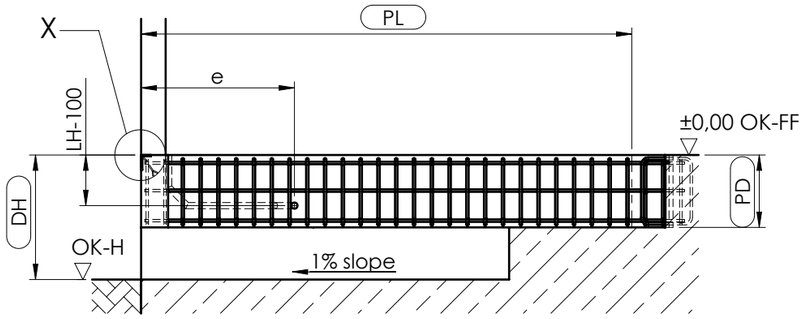

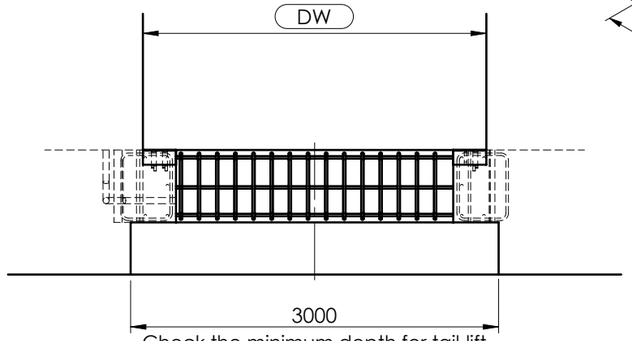

Check the minimum depth for tail-lift,
Recommendation 3000 mm

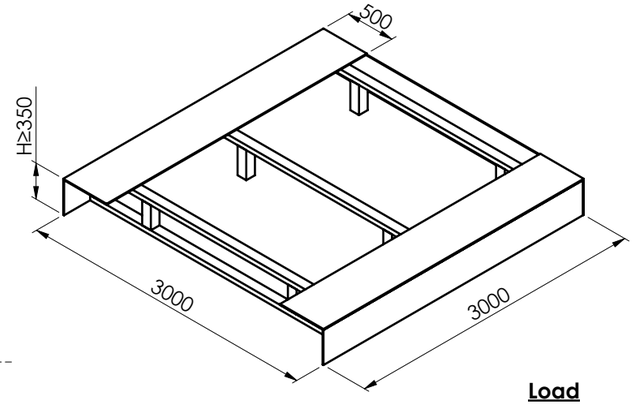

Load

Load capacity	F1
60 kN	57 kN
80 kN	76kN
100 kN	95kN

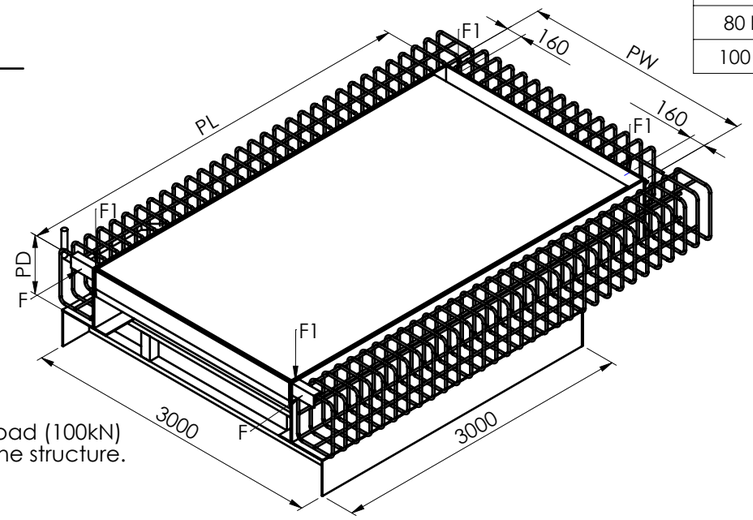

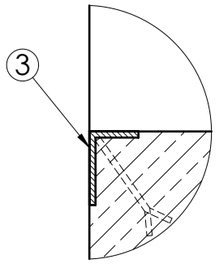

X

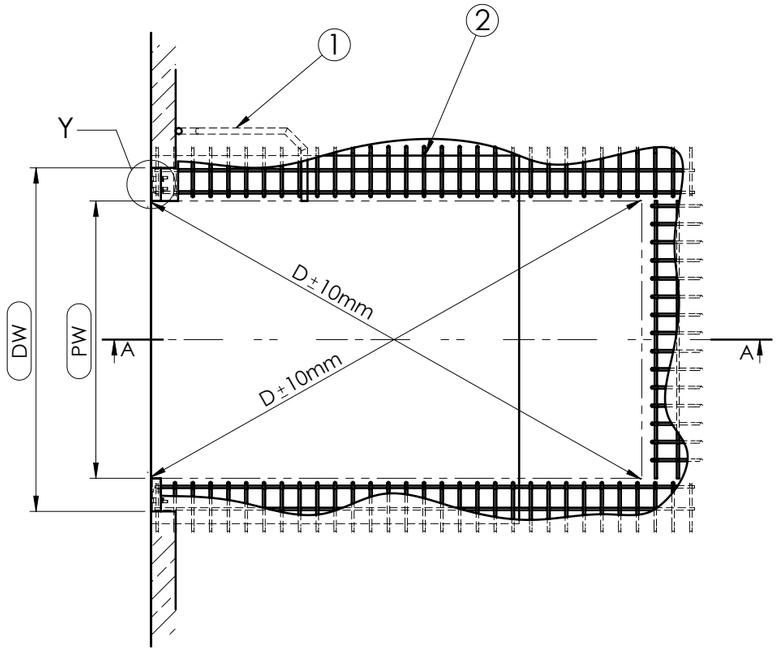

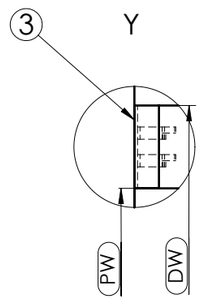

F = The horizontal impact load (100kN)
must be absorbed by the structure.
F1= Cross traffic position

Placement of the conduits: either on the right or on the left side.
Illustration: installation on the right side

DH = Dock height
LH = Leveller height
OK-FF = Finish floor level
OK-H = Yard level
PW = Pit width
DW = Door width
NL = Nominal lenght
PL = Pit lenght
PD = Pit depth

by others:

(1) - Conduit for wiring internal diameter min. 50mm, angles <45°

(2) - Reinforcement

(3) - Steel profile e.g. angle 120x80x10

Attention:
- Do not deviate from the measurements given
- The pit walls must be vertical
-The corners of the pit must be square (diagonals must be equal)
- The preparation of the pit and the dowels by others

Installation place drawn: NL=4000
NW=2200
LH=900

NL	1750	2000	2000	2500	2500	2750	2750	3000	3000	3500	4000	4500
PL	1790	2040	2040	2540	2540	2790	2790	3040	3040	3540	4040	4540
LH	700	600	700	600	700	600	700	600	700	800	900	900
PD	690	590	690	590	690	590	690	590	690	790	890	890
e	1100	1250	1250	1400	1400	1400	1400	1400	1400	1400	1400	1400

NW	PW
1750	1880
2000	2130
2100	2230
2200	2330
2250	2380
2400	2530

DIMENSIONS ARE IN MILLIMETERS

DO NOT SCALE DRAWING

REVISION A

	NAME	SIGNATURE	DATE
DRAWN	P.Zarębski		2019-06-19
CHK'D			
APPV'D			
MFG			
Q.A			

PROM

TITLE:

PS B with tail lift

DWG NO.

PSE.00.00.23-EN

A3

SCALE:1:50

EN