SECTION A-A

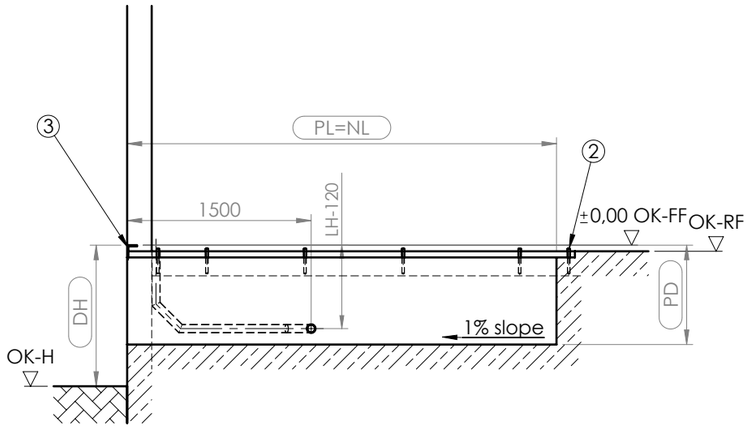

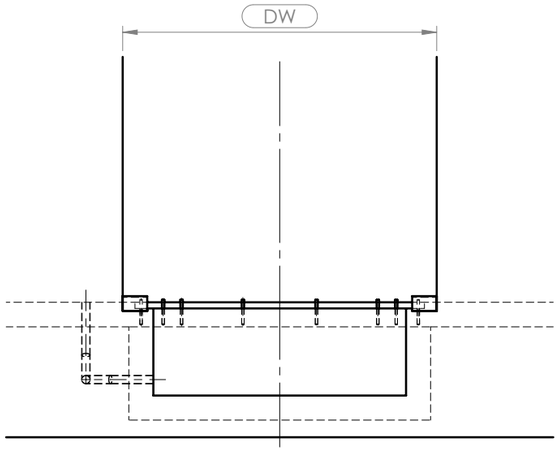

Load

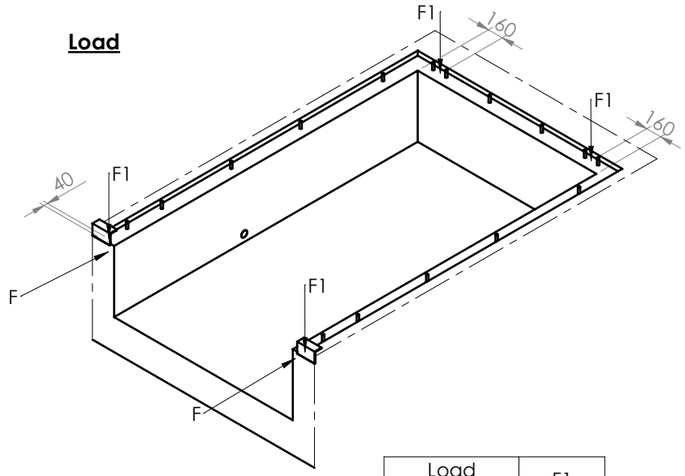

F = The horizontal impact load (100kN) must be absorbed by the structure.
F1= Cross traffic position

Load capacity	F1
60kN	57kN
80kN	76kN
100kN	95kN
120kN	114kN
150kN	143kN

SECTION B-B
SCALE 1 : 10

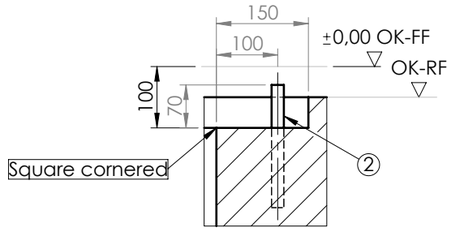

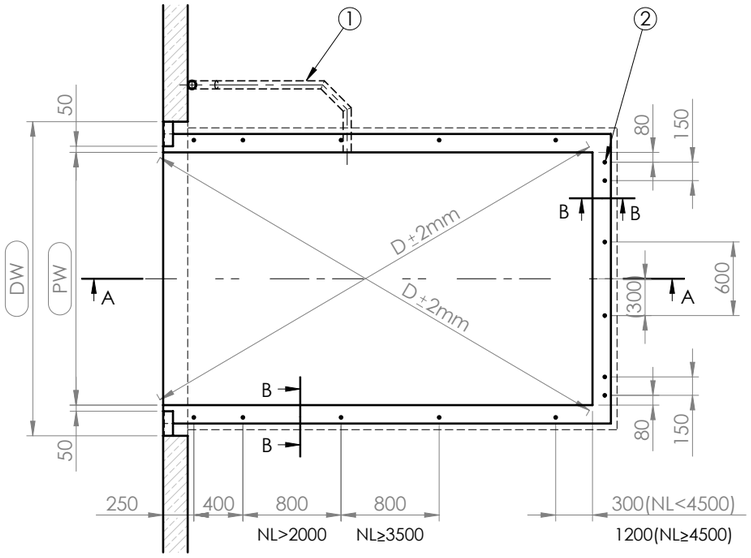

Placement of the conduits: either on the right or on the left side.
Illustration: installation on the right side

DH = Dock height	by others:
DW = Door width	① - Conduit for wiring internal diameter min. 50mm, angles <45°
OK-FF = Finish floor level	② - Plain steel dowel ∅20-200mm
OK-RF = Floor base	③ - Steel profile e.g. angle 120x80x10
OK-H = Yard level	
PL = Pit lenght	Attention:
PW = Pit width	- Do not deviate from the measurements given
NL = Nominal lenght	- The pit walls must be vertical
NW = Nominal width	-The corners of the pit must be square (diagonals must be equal)
LH = Leveller height	- The preparation of the pit and the dowels by others
n = number fish-tails	*Cast in concrete after welding of the leveller or of the pre-frame. (by others)
PD = Pit depth	

Installation place drawn: NL=3500
NW=2000
LH=800

NL	1750	2000	2000	2500	2500	2750	2750	3000	3000	3500	4000	4500
LH	700	600	700	600	700	600	700	600	700	800	900	900
n	12	12	12	14	14	14	14	14	14	16	16	16
PD	710	610	710	610	710	610	710	610	710	810	910	910

NW	PW
1750	1810
2000	2060
2200	2260
2250	2310

UNLESS OTHERWISE SPECIFIED:
DIMENSIONS ARE IN MILLIMETERS
SURFACE FINISH:
TOLERANCES:
EN 22768 - m, k
EN 13920 - B, F

FINISH:

DEBUR AND BREAK SHARP EDGES

DO NOT SCALE DRAWING

REVISION **A**

MATERIAL:

	NAME	SIGNATURE	DATE
DRAWN	P.Zarębski		2019-06-19
CHK'D			
APPV'D			
MFG			
Q.A			

PROM

TITLE:

PS T/W without tail lift

DWG NO. PSE.00.00.05-EN

A3

WEIGHT:

SCALE:1:50

EN